Lampa GALAXSIE

[mm] = max.:16,5 kg

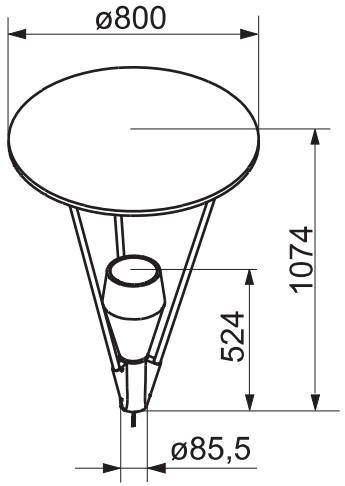

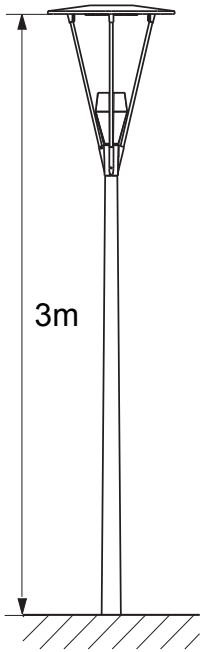

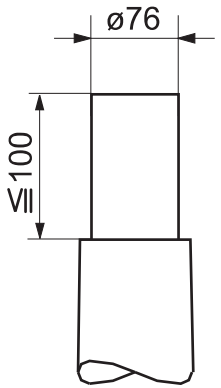

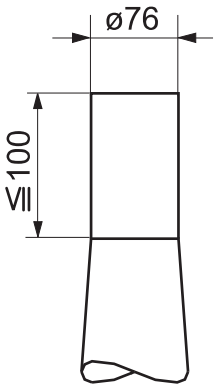

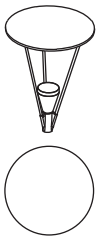

A_w =0,16m²

A_w =0,50m²